RKP CC5 1001

Rocker Panel / Running Board
Front Mud Guard Set
For 1984-2005 ClubCar DS Models

ASSEMBLY INSTRUCTIONS

Running Board/Rocker Panels
For
Club Car, Aluminum

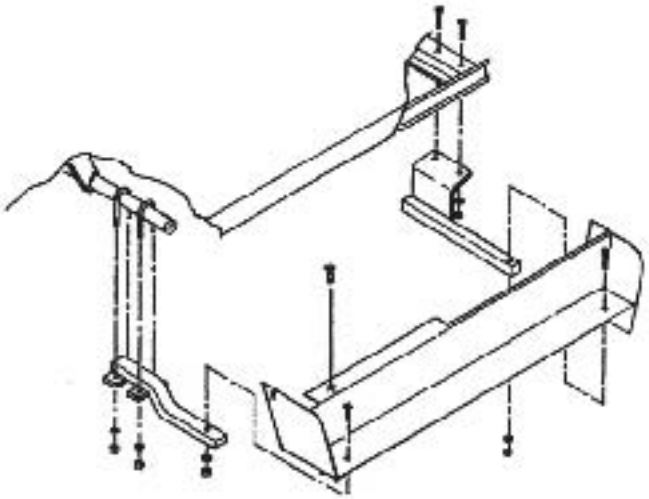

Copyright© 1997-2010. All Rights Reserved.

BW / 2side

1. Remove rubber side trim from cart. Attach each of the Front mounting brackets with U-bolts provided using 4 ea 1/4" flat washer and nylok nuts for each bracket approximately 3 1/8' of the mounting bracket should extend rom the cart. Attach each of the rear mounting brackets using 2 ea 1/4" x 1" hex bolts, 1/4" flat washers and Nylok nuts for each side. Note: Some carts have 1, 2, or no holes in the frame depending on the year, some drill ing may be required. When mounted correctly, the square tubing will be flush with the bottom of the cart and extending out approximately 3 1/8" from the cart (Figure 1).

2. Lay rocker panel/running boards on mounting brackets and clamp together. Drill 2 ea 1/4" holes from the underside of each of the rocker panel/running boards. Attach using 1 ea 1/4" x 1 1/4" Phillips stainless screw, 1/4" flat washer and, Nylok nut for each front bracket, and a 1/4" x 1 3/4" Phillips stainless screw, 1/4" flat washer, and Nylok nut for each rear bracket. (Figure 1)

3. Drill a 1/4" hole through the plate portion of each running board and into the floorboard. Secure using 1 ea 1/4" x 1" stainless screw, 1/4" flat washer and Nylok nut for each side. (Figure 1)

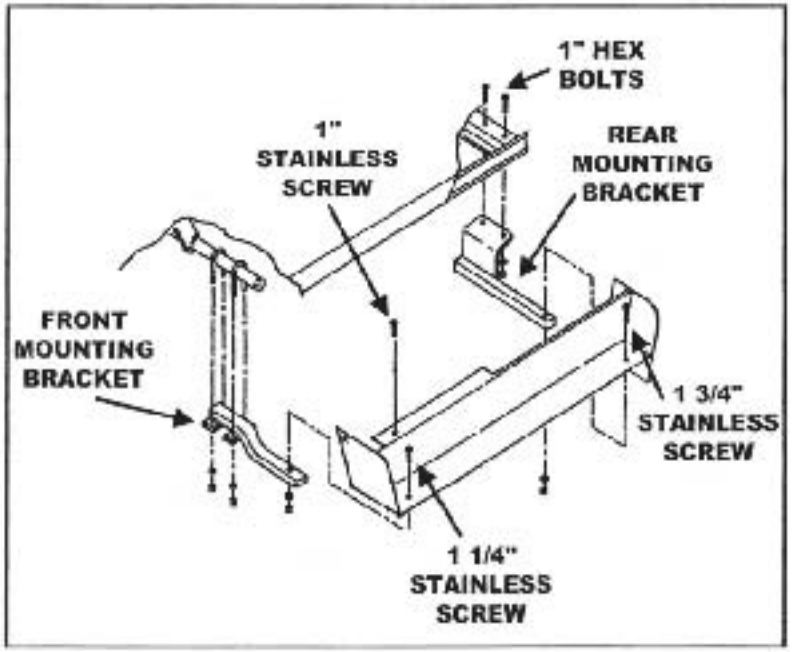

Figure 1

4. Drill a 1/4" hole through the corner of the front panel and the body of the cart. Secure front panel using 1 ea 1/4" stainless screw and 1/4" flat washer and Nylok nut. (Figure 2). Reapeat for other side.

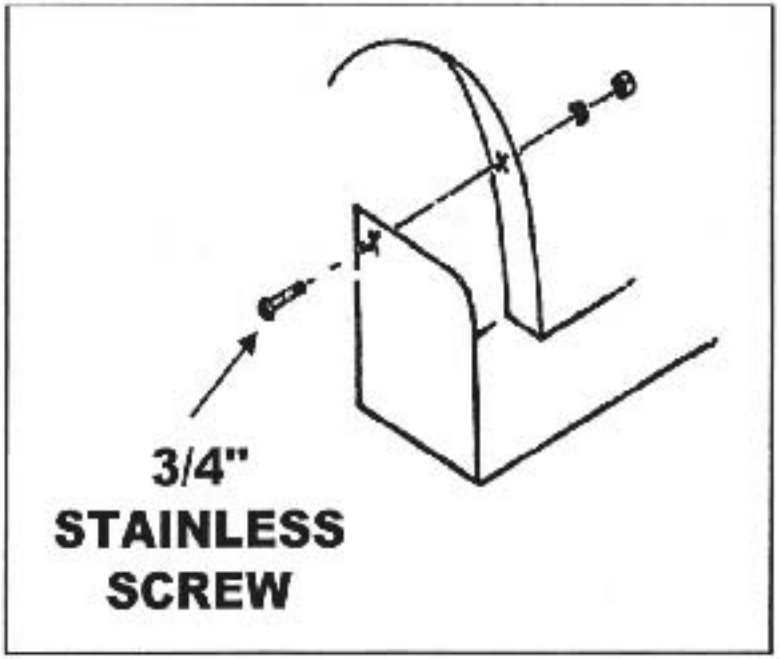

Figure 2